Trios Tables

TB.TRX.XX.____.A.7XX-XXXX-XX

OVERVIEW

The Trios Table is a durable table with many available sizes and customization options, ideal for commercial and educational settings.

TOP

The top is made of 1 1/8" Particleboard Core with 3mm Flat Vinyl Edge. The work surface is constructed of 45# particleboard core with high pressure laminate (HPL) top surface and phenolic backer sheet for balanced construction. 1 1/8" 3mm flat vinyl is secured to the work surface with glue along the perimeter. Stretcher bars are standard on tops 60" long and longer.

LEGS

Legs come in three different styles: T-leg, Arch T-leg, and C-leg. The column for all styles is 2" OD x 14 Ga steel tubing, and is rigid bolted to steel tube base with a single 1/2-13 threaded tie rod. Bases for T and C legs are 2" OD x 14 Ga steel tubing with welded steel end caps. Base for Arch T-leg is 1 3/8" OD x 13 GA. A .187" x 6" x 8" fabricated steel mounting plate is welded to the top of the column and requires 8 #12-14 wood screws to secure directly to table top. Legs are available as 29.5" fixed height or height adjustable with spring clips between 26" and 35" in 1" increments. Height adjustable legs use a 0.2" steel tubing column wiht an 8 Ga steel insert.

CASTERS/GLIDES

Tables available with 60mm dual wheel casters or 2.25" height adjustable nylon glides. Glides and casters screw directly into base for T and C legs and threaded inserts welded into feet for Arch T-leg.

FOLDING MECHANISM

The folding mechanism for flip top tables is made of injection molded plastic and aluminum and is attached to the table top with eight #10 screws. The handle release mounts on the underside of the table and is centered on the table length. A single handle releases both mechanisms simultaneously and locks in both the up and down positions.

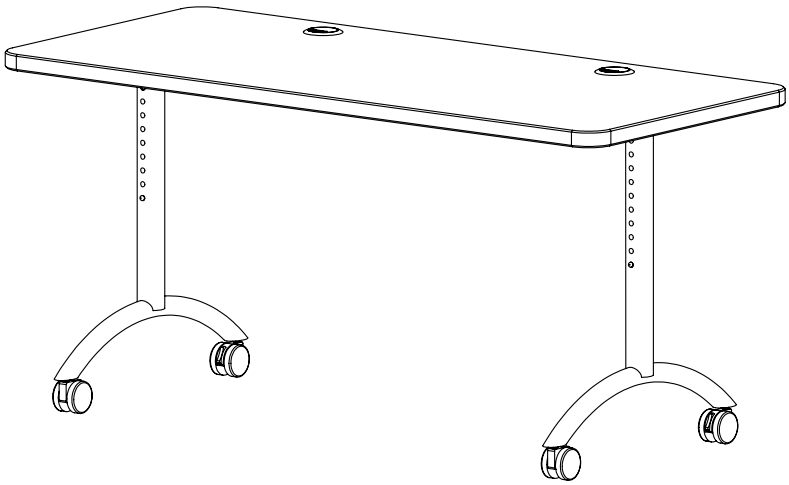

CERTIFIED INDOOR AIR QUALITY™ SCS GLOBAL SERVICES

INDOOR ADVANTAGE GOLD FURNITURE

OPTIONS / ACCESSORIES

- Legs available with casters, glides, or combination with extended glides.
- Optional wire management holes.
- Shorter or taller heights are available.
- Adjustable height legs are available.
-Flip tops available for fixed height only.

LAMINATE AND EDGEBAND

See attached material guide for all options.

T-LEG (.ST)

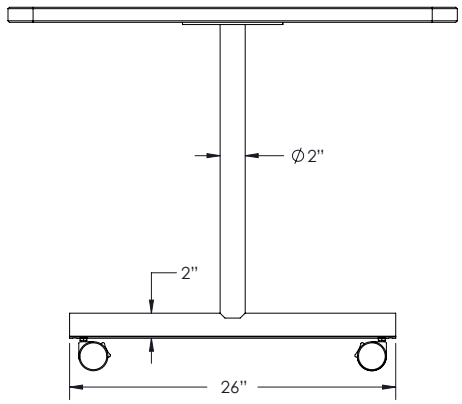

C-LEG (.SC)

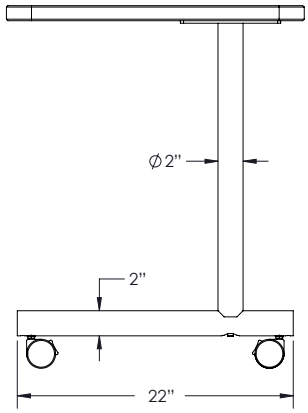

ARCH T-LEG (.AT)

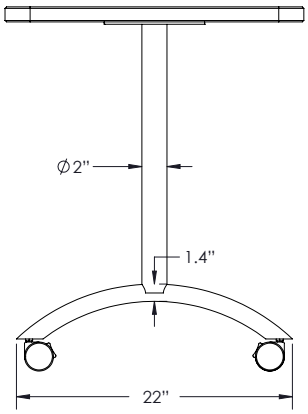

Base Model No.	Description
TB.TRG.AT.____.A.7XX-XXXX-XX	Adjustable Arch T-Leg with Glides
TB.TRG.AT.____.F.7XX-XXXX-XX	Fixed Height Arch T-Leg with Glides
TB.TRG.FTAT____.F.7XX-XXXX-XX	Flip Top Arch T-Leg with Glides
TB.TRC.AT.____.A.7XX-XXXX-XX	Adjustable Arch T-Leg with Casters
TB.TRC.AT.____.F.7XX-XXXX-XX	Fixed Height Arch T-Leg with Casters
TB.TRC.FTAT____.F.7XX-XXXX-XX	Flip Top Arch T-Leg with Casters
TB.TRG.ST.____.A.7XX-XXXX-XX	Adjustable Straight T-Leg with Glides
TB.TRG.ST.____.F.7XX-XXXX-XX	Fixed Height Straight T-Leg with Glides
TB.TRG.FTST____.F.7XX-XXXX-XX	Flip Top Fixed Height Straight T-Leg with Glides
TB.TRC.ST.____.A.7XX-XXXX-XX	Adjustable Straight T-Leg with Casters
TB.TRC.ST.____.F.7XX-XXXX-XX	Fixed Height Straight T-Leg with Casters
TB.TRC.FTST____.F.7XX-XXXX-XX	Flip Top Fixed Height Straight T-Leg with Casters
TB.TRG.SC.____.A.7XX-XXXX-XX	Adjustable Straight C-Leg with Glides
TB.TRG.SC.____.F.7XX-XXXX-XX	Fixed Height Straight C-Leg with Glides
TB.TRC.SC.____.A.7XX-XXXX-XX	Adjustable C-Leg with Casters
TB.TRC.SC.____.F.7XX-XXXX-XX	Fixed Height C-Leg with Casters

Top Sizes (W x D)	Leg Style Options
36″ x 24″ (3624)	Fixed Height, Adjustable
48″ x 24″ (4824)	Fixed Height, Adjustable
60″ x 24″ (6024)	Fixed Height, Adjustable, Flip Top
60″ x 30″ (6030)	Fixed Height, Adjustable, Flip Top
60″ x 36″ (6036)	Fixed Height, Adjustable, Flip Top
72″ x 24″ (7224)	Fixed Height, Adjustable, Flip Top
72″ x 30″ (7230)	Fixed Height, Adjustable, Flip Top
72″ x 36″ (7236)	Fixed Height, Adjustable, Flip Top

MOORECO™

MOORECO INC.
2885 Lorraine Avenue | Temple, TX 76501
p: 800.749.2258 | f: 866.888.7483
www.moorecoinc.com